REVISIONS			
REV.	DESCRIPTION	DATE	BY
1	Keeper was HD-1010 Aluminum Keeper	1/6/2016	SFB
2	Replaced Insert in Lock Stile with FG Reinforcement	8/4/2016	SFB
3	Keeper was VBP20293 Keeper	8/17/2016	SFB

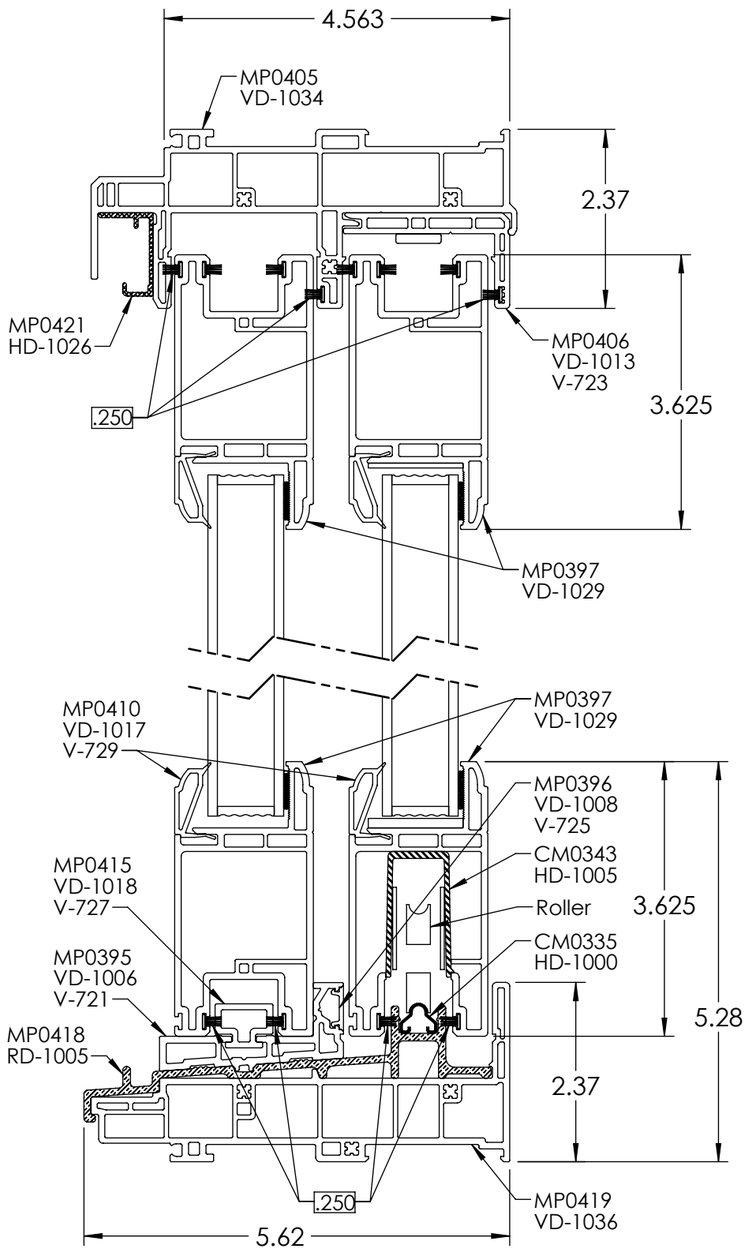

VERTICAL ASSEMBLY

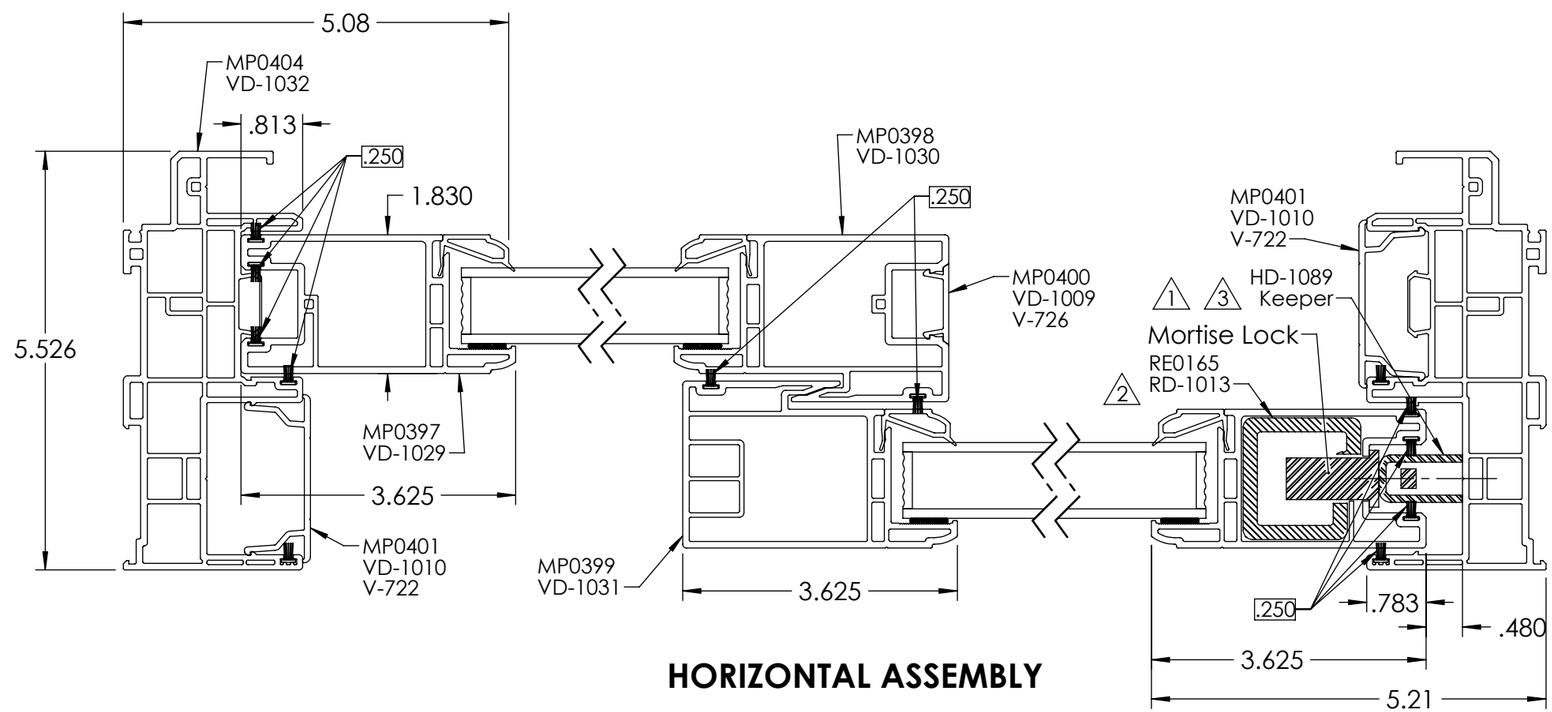

HORIZONTAL ASSEMBLY

DISCLOSURE STATEMENT

This document is the property of Simonton Windows, which retains all proprietary and other rights to its subject matter. This document is provided to the recipient on the expressed condition that it is not to be disclosed, reproduced in whole or in part, nor used in conjunction with the design, manufacture or repair of goods for anyone other than Simonton Windows without its consent. This restriction does not limit the recipient's rights to utilize information contained in this document which is properly obtained from another source.

FILE: C:\PDM Workspace\

MATERIAL:	
FINISH TREATMENT:	
MOMENT OF INERTIA (IN ^4):	-
SURFACE AREA (IN ^4):	-
VOLUME (IN ^3):	
WEIGHT (LBS PER FT):	

Dimensional Tolerances Unless Otherwise Specified

Decimals	Angles
.X ± .03	
.XX ± .01	± 1 Degree
.XXX ± .005	

ITEM #:

VENDOR #:

SIMONTON WINDOWS

SIZE: B	DRAWING NUMBER: AS0488		REV. 3
DRAWN BY: SFB		DATE: 12/19/13	
CHECKED BY: -		DATE: -	
SCALE: 1:2	SHEET: 1 of 6	APPRV'D BY: -	DATE: -
SERIES: Gateway			
TITLE: 2-Panel Main Assembly			

8/17/2016

REVISIONS			
REV.	DESCRIPTION	DATE	BY
1	Was HD-1010 Aluminum Keeper	1/6/2016	SFB
2	Replaced Insert in Lock Stile with FG Reinforcement	8/4/2016	SFB
3	Keeper was part VBP20293	8/17/2016	SFB

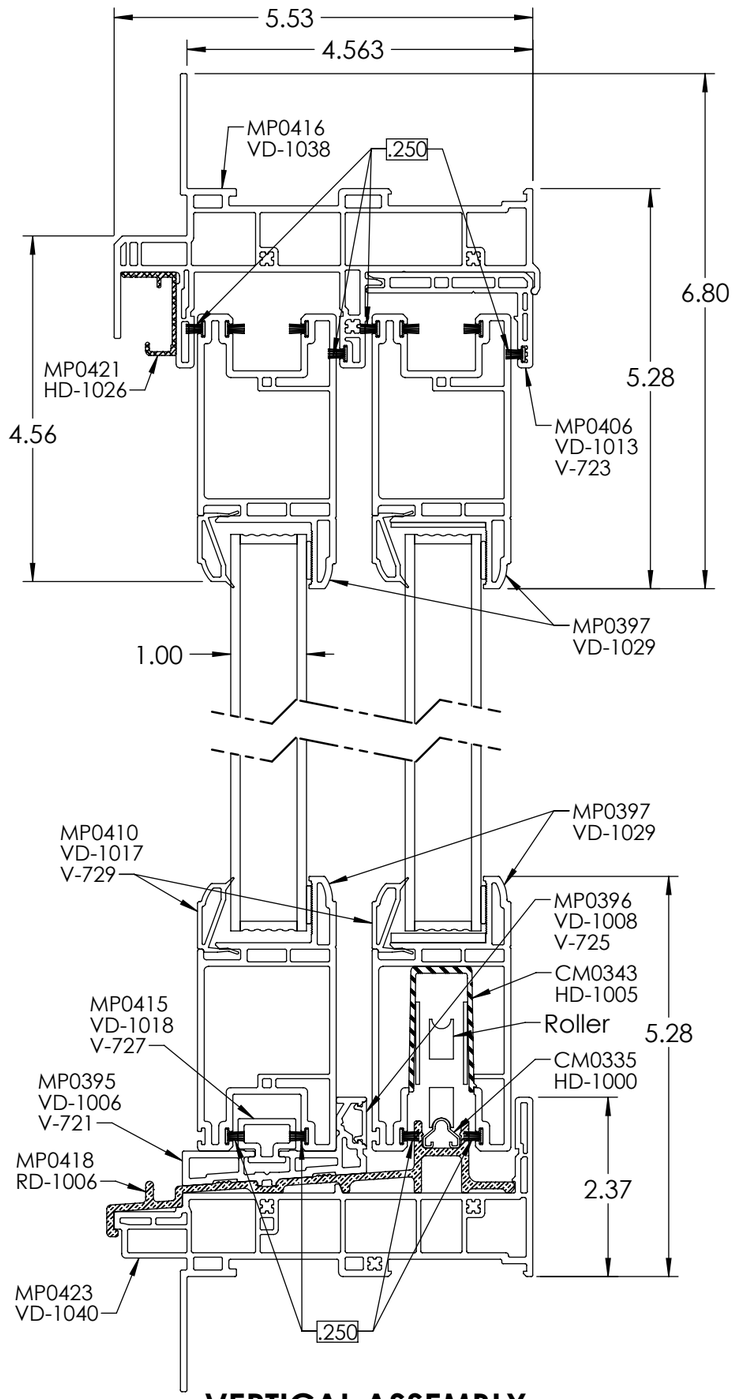

VERTICAL ASSEMBLY

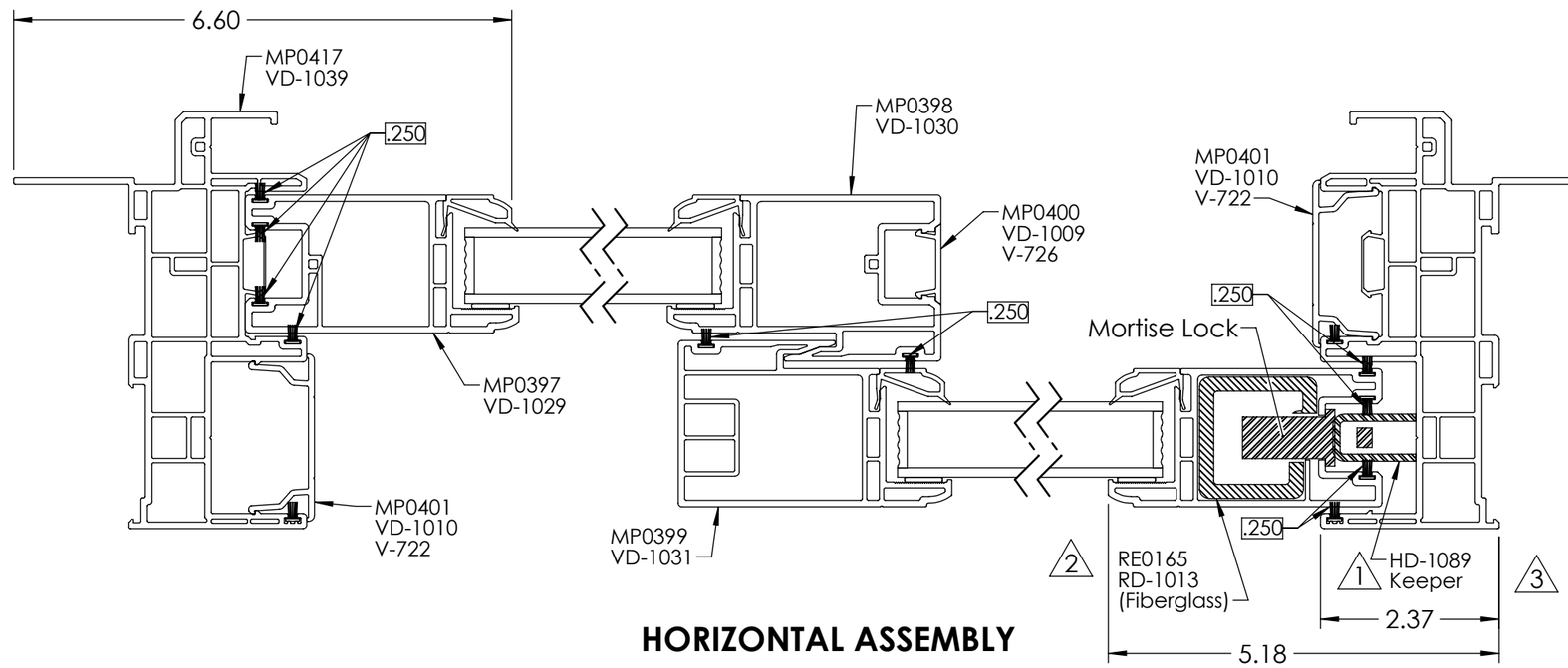

HORIZONTAL ASSEMBLY

DISCLOSURE STATEMENT

This document is the property of Simonton Windows, which retains all proprietary and other rights to its subject matter. This document is provided to the recipient on the expressed condition that it is not to be disclosed, reproduced in whole or in part, nor used in conjunction with the design, manufacture or repair of goods for anyone other than Simonton Windows without its consent. This restriction does not limit the recipient's rights to utilize information contained in this document which is properly obtained from another source.

FILE: C:\PDM Workspace\

MATERIAL:

FINISH TREATMENT:

MOMENT OF INERTIA (IN ^4): -

SURFACE AREA (IN ^4): -

VOLUME (IN ^3):

WEIGHT (LBS PER FT):

Dimensional Tolerances Unless Otherwise Specified

Decimals	Angles
.X ± .03	
.XX ± .01	± 1 Degree
.XXX ± .005	

ITEM #:

VENDOR #:

SIMONTON WINDOWS

SIZE: B	DRAWING NUMBER: AS0489	REV. 3	
DRAWN BY: SFB	DATE: 11/26/14		
CHECKED BY: -	DATE: -		
SCALE: 1:2	SHEET: 1 of 6	APPRV'D BY: -	DATE: -

SERIES: Gateway PD

TITLE: 2-Panel Fin Frame Assembly

8/17/2016

REVISIONS			
REV.	DESCRIPTION	DATE	BY
1	Keeper was HD-1010 Aluminum Keeper	1/6/2016	SFB
2	Replaced Lock Stile Insert with FG Reinforcement	8/4/2016	SFB
3	Keeper was VBP20293	8/17/2016	SFB

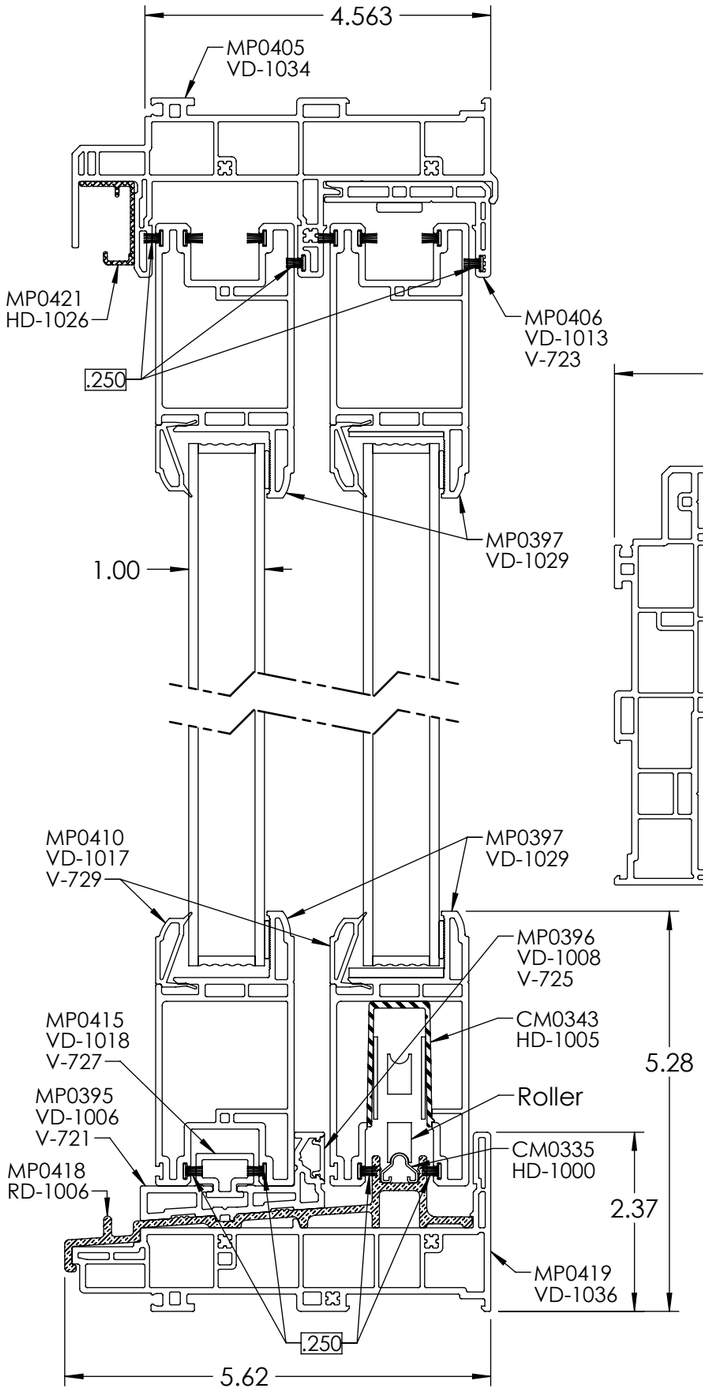

VERTICAL ASSEMBLY

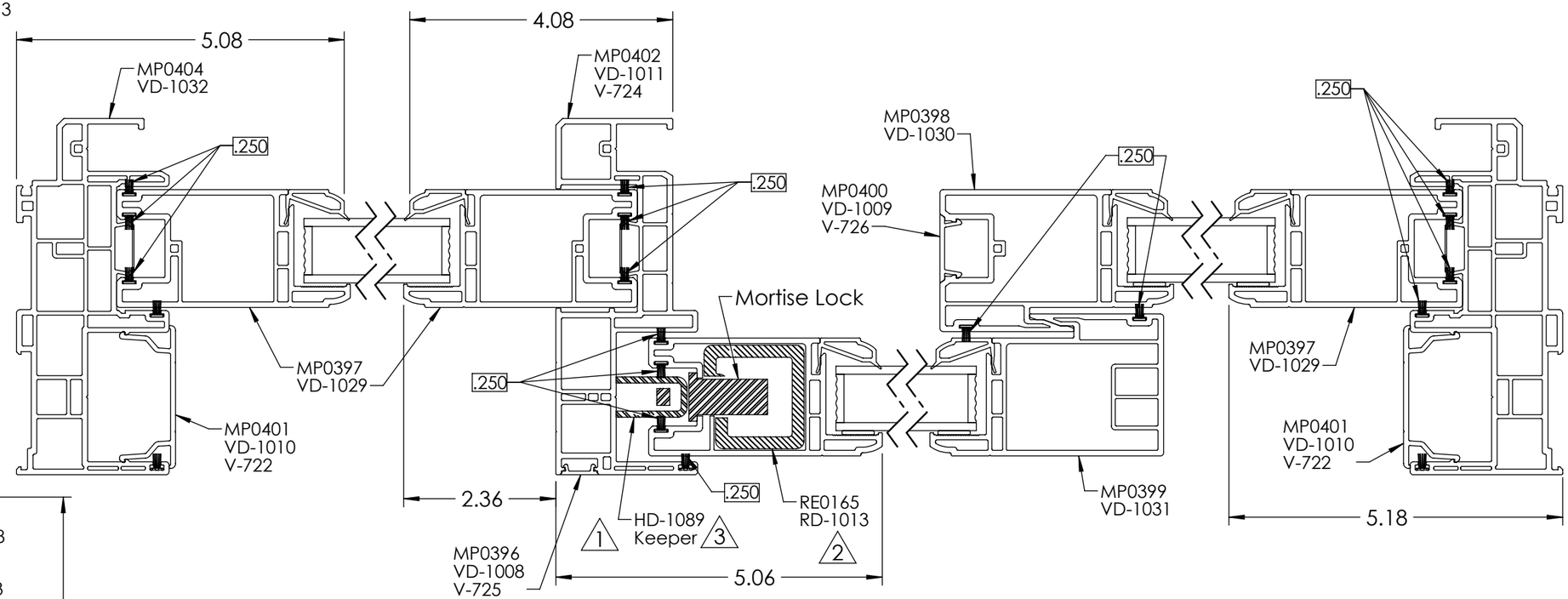

HORIZONTAL ASSEMBLY

DISCLOSURE STATEMENT

This document is the property of Simonton Windows, which retains all proprietary and other rights to its subject matter. This document is provided to the recipient on the expressed condition that it is not to be disclosed, reproduced in whole or in part, nor used in conjunction with the design, manufacture or repair of goods for anyone other than Simonton Windows without its consent. This restriction does not limit the recipient's rights to utilize information contained in this document which is properly obtained from another source.

MATERIAL:
FINISH TREATMENT:
MOMENT OF INERTIA (IN ^4): -
SURFACE AREA (IN ^4): -
VOLUME (IN ^3):
WEIGHT (LBS PER FT):

Dimensional Tolerances Unless Otherwise Specified
Decimals: .X ± .03, .XX ± .01, .XXX ± .005
Angles: ± 1 Degree
ITEM #:
VENDOR #:

SIMONTON WINDOWS

SIZE:	DRAWING NUMBER:	REV.
B	AS0490	3
DRAWN BY: SFB	DATE: 3/24/14	
CHECKED BY: -	DATE: -	
APPRV'D BY: -	DATE: -	

SCALE: 1:2 SHEET: 1 of 6
SERIES: Inovo Patio Door
TITLE: Assembly - 3-Panel Door
FILE: C:\PDM Workspace\

8/17/2016

REVISIONS			
REV.	DESCRIPTION	DATE	BY
1	Replaced Lock Stile Insert with FG Reinforcement	8/5/2016	SFB
2	Keeper was VBP20293	8/17/2016	SFB

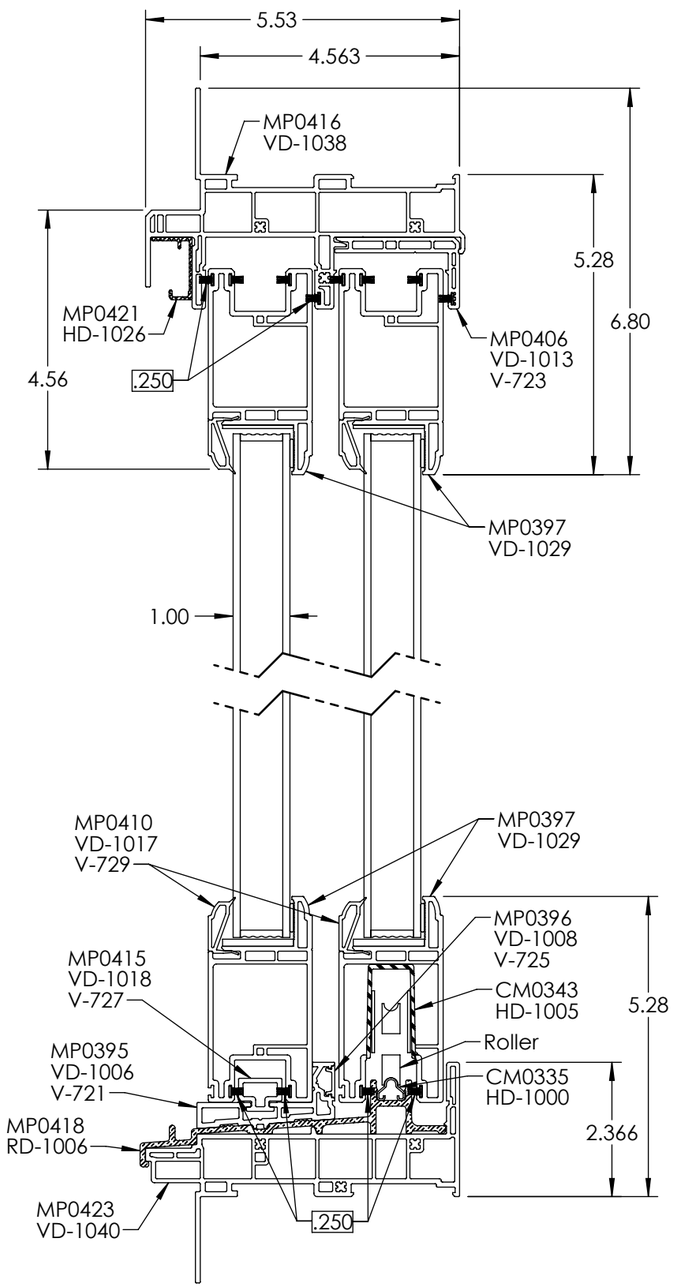

VERTICAL ASSEMBLY

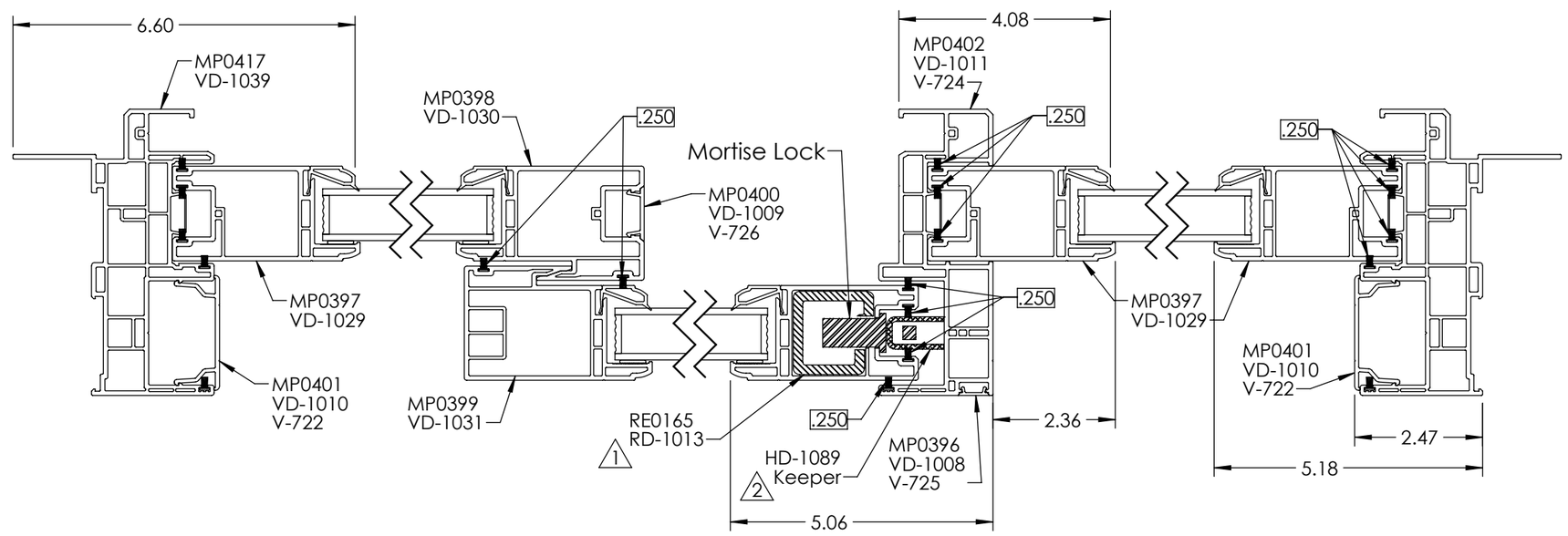

HORIZONTAL ASSEMBLY

DISCLOSURE STATEMENT

This document is the property of Simonton Windows, which retains all proprietary and other rights to its subject matter. This document is provided to the recipient on the expressed condition that it is not to be disclosed, reproduced in whole or in part, nor used in conjunction with the design, manufacture or repair of goods for anyone other than Simonton Windows without its consent. This restriction does not limit the recipient's rights to utilize information contained in this document which is properly obtained from another source.

FILE: C:\PDM Workspace\

MATERIAL:
FINISH TREATMENT:
MOMENT OF INERTIA (IN ^4): -
SURFACE AREA (IN ^4): -
VOLUME (IN ^3):
WEIGHT (LBS PER FT):

Dimensional Tolerances Unless Otherwise Specified

Decimals	Angles
.X ± .03	
.XX ± .01	± 1 Degree
.XXX ± .005	

ITEM #:
VENDOR #:

SIMONTON WINDOWS

SCALE: 3:8 SHEET: 1 of 6

SERIES: Gateway PD

TITLE: 3 Panel Assembly - Fin Frame

SIZE:	DRAWING NUMBER:	REV.
B	AS0491	2

DRAWN BY: SFB	DATE: 3/13/15
CHECKED BY: -	DATE: -
APPRV'D BY: -	DATE: -

8/17/2016

REVISIONS			
REV.	DESCRIPTION	DATE	BY
1	Keeper was HD-1010 Aluminum Keeper	1/7/2016	SFB
2	Replaced Lock Stile Insert with FG Reinforcement	8/5/2016	SFB
3	Keeper was VBP20293	8/17/2016	SFB

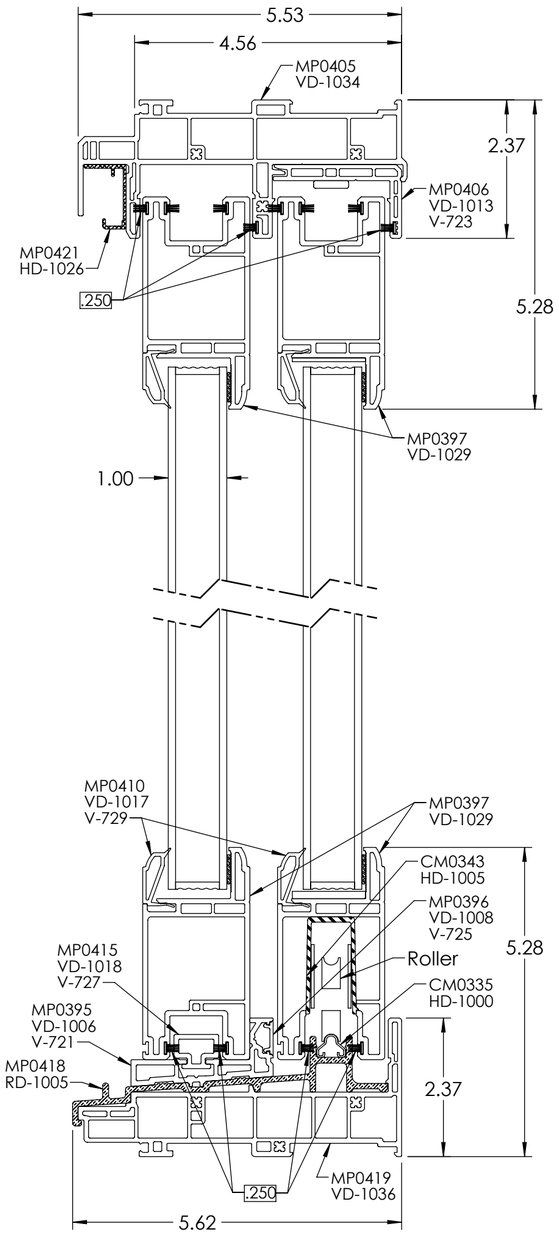

VERTICAL SECTION

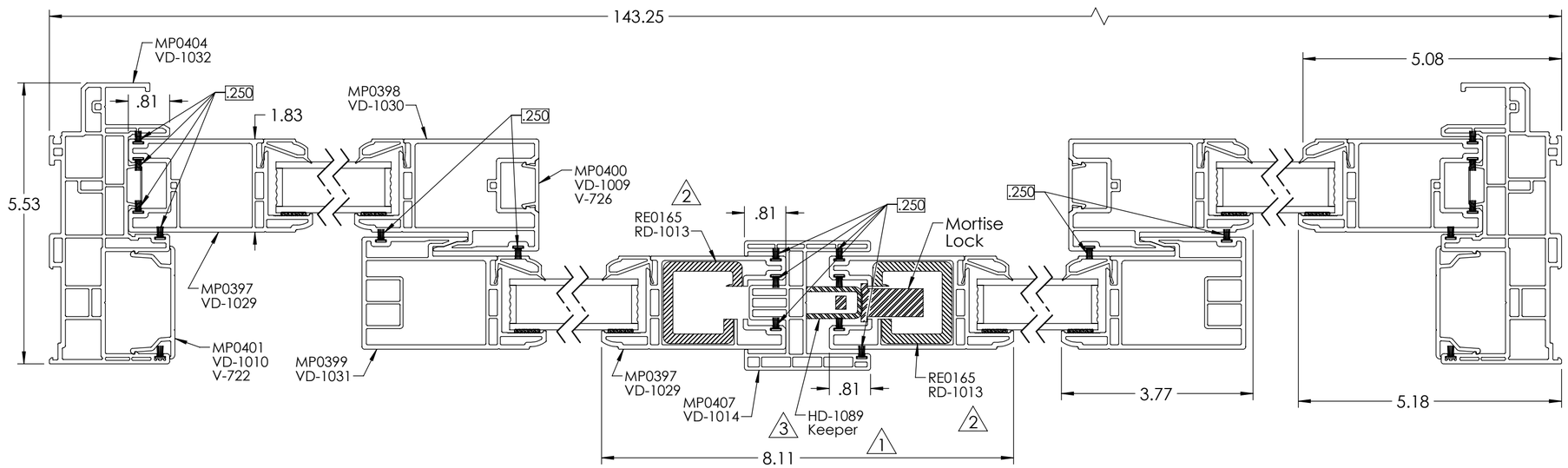

HORIZONTAL SECTION

DISCLOSURE STATEMENT

This document is the property of Simonton Windows, which retains all proprietary and other rights to its subject matter. This document is provided to the recipient on the expressed condition that it is not to be disclosed, reproduced in while or in part, nor used in conjunction with the design, manufacture or repair of goods for anyone other than Simonton Windows without its consent. This restriction does not limit the recipient's rights to utilize information contained in this document which is properly obtained from another source.

MATERIAL:	Dimensional Tolerances Unless Otherwise Specified	
FINISH TREATMENT:	Decimals: .X ± .03; .XX ± .01; .XXX ± .005	Angles: ± 1 Degree
MOMENT OF INERTIA (IN ^4): –		
SURFACE AREA (IN ^2): –		
VOLUME (IN ^3):	ITEM #:	
WEIGHT (LBS PER FT):	VENDOR #:	

SIMONTON WINDOWS

SIZE: C	DRAWING NUMBER: AS0493	REV. 3	
DRAWN BY: SFB	DATE: 8/23/13		
CHECKED BY: –	DATE: –		
APPRV'D BY: –	DATE: –		
SCALE: 1:2	SHEET: 1 of 6		
SERIES: Inovo PD			
TITLE: 4-Panel Assembly			

FILE: C:\PDM Workspace\

8/17/2016